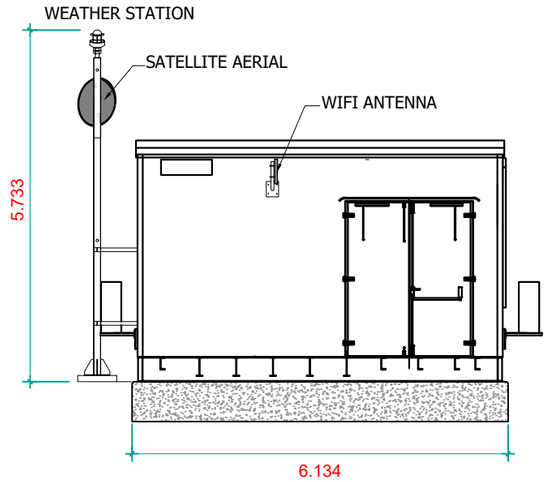

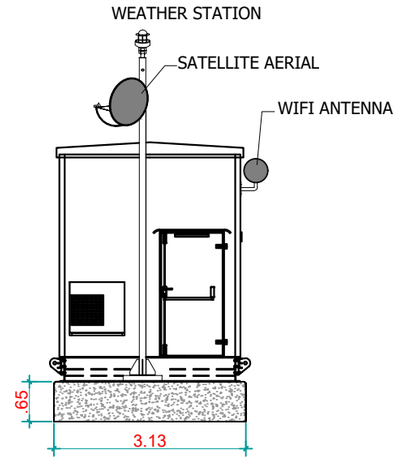

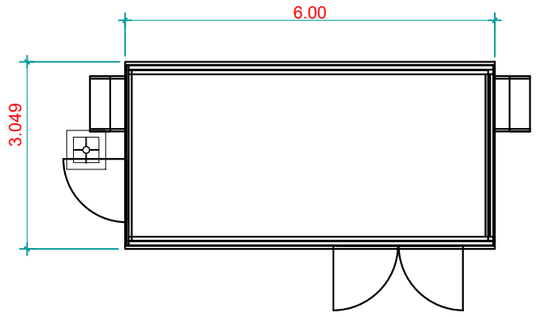

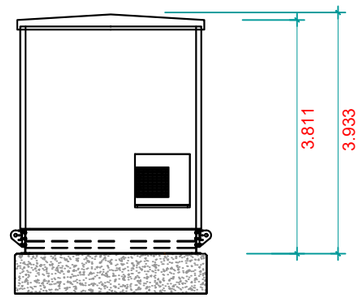

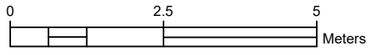

GENERAL NOTES

1) ALL DIMENSIONS ARE IN METERS UNLESS SPECIFIED.

LEGEND

REFERENCE DRAWINGS

No.	DRAWING TITLE	DRAWING No.

R	DATE	DESCRIPTION OF REVISION	REMARKS

PROJECT NAME :

HILFIELD
SOLAR PV AND BATTERY

OWNER'S ENGINEER :

GENERAL CONTRACTOR :

blueleaf energy

80 Anson Road, #09-01,
Fuji Xerox Towers,Singapore 079907.
TEL: +65 6849 5540, FAX: +65 6849 5559.
www.blueleafenergy.com

THIS DRAWING IS PROPERTY OF BLUELEAF ENERGY AND MAY NOT BE COPIED (IN WHOLE OR IN PART) USED FOR MANUFACTURING OR DISCLOSED WITHOUT PRIOR CONSENT OF BLUELEAF ENERGY ASIA.

		SIGN	TITLE :
DRAWN BY	: GMJS		CONTROL ROOM ELEVATIONS
DATE	: 28-10-2022		
CHECKED BY	:		
DATE	:		
APPROVED BY	:		
DATE	:		

DRAWING No. : **HF9.0**

SHEET SIZE	SHEET	SCALE	REV
A3	1 OF 1	1:100	03